SVTS E Series
Naked

TDS Precision Products

TDS Precision Products GmbH
Industriestrasse 1a
CH-8157 Dielsdorf

T + 41 44 885 30 80
info@tds-pp.com
www.tds-pp.com

Contents

Model	In ⌀	Page
SVTS E 01	25,4mm	94 - 95
SVTS E 02	38,1mm	96 - 97
SVTS E 03	50mm	98 - 99
SVTS E 04	60mm	100 - 101

SVTS E Series
Naked Slip Rings

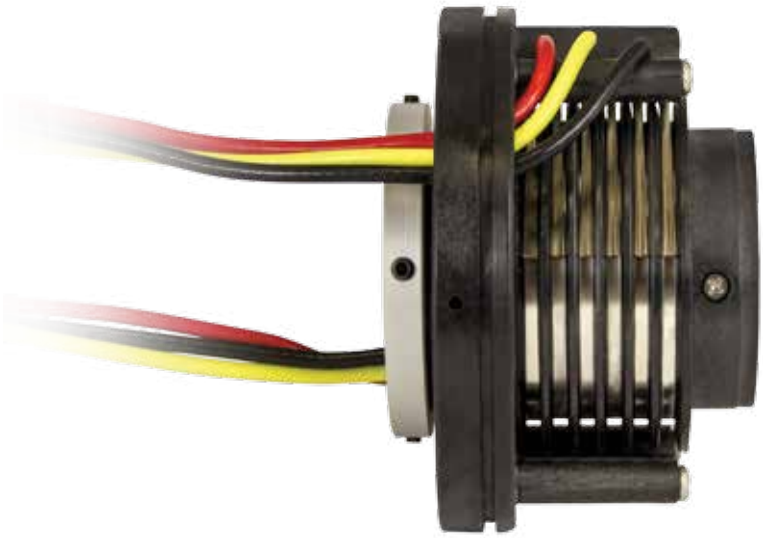

COST-EFFECTIVE THROUGH-BORE EASY INTEGRATION

The naked E series Slip Rings, are a compact solution that provide high performance keeping the costs down. Available with through holes with diameters ranging from 25 mm to 60 mm and currents from 20 A to 60 A.

The affordable rotary joints of the E series are ideal for integrating into machine structures where there are no particular risks of contamination.

Benefits

- Cost-effective
- Easy integration

servotecnica

Product code (detailed coding system on page 9)

1	2	3	4	5	6	7	8	9	10
SVTS	E	BB -	C -	D -	EE /	FF -	GGGG /	HHHH -	II -	XXX

1 Family	3 Protection[1]	5 Power circuits	7 Cable length - brushes side	9 Temperature range[2]
2 Series	4 Flange types	6 Signal circuits	8 Cable length - rings side	10 Special options[3]

[1] IP00 [R]
[2] Standard [ST]
[3] 20A circuits [001]; 40A circuits [002]; 60A circuits [003]

Main applications

Wind turbines
Rotating billboards
Rotary tables
Cable reels
Palletisers

Features

Current	
Power	20A: 1xAWG14 (each circuit) 40A: 2xAWG14 (each circuit) 60A: 3xAWG14 (each circuit)
Signals	2A: AWG26
Voltage	400 VAC/DC
Cables	Tin plated - PVC insulation
Cables length	Standard: 500mm; custom cable length increase possible as multiples of 500mm
Insulation resistance	> 1000 MΩ/500 VDC
Nominal speed	300 rpm (higher speed upon request)
Dynamic contact resistance	< 0.01Ω
Bearings	Steel
Housing	ABS (hard plastic)
Temperature	-20°C +80°C
Protection	IP00
Expected lifetime	10^8 revolutions (depending on speed, environmental conditions and size)

SVTS E 01

Model	Number of circuits			Diameters	
	Total	Power		Inside ⌀ (trough-bore)	*L*
		20A	40A		
SVTS E 01-R-A-03/00-...-001	3	3	-	25,4	55
SVTS E 01-R-A-03/00-...-002	3	-	3	25,4	55

Transmission of	
Electric	Fluidic (combined solutions)
Signals	Air
Power	Oil
	Gas
	Water

Customisations		
Cables		

All dimensions in millimeters, unless otherwise specified

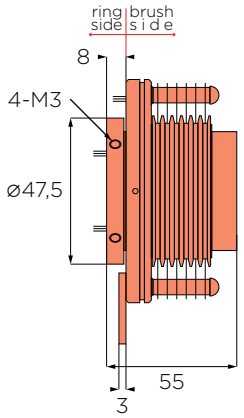

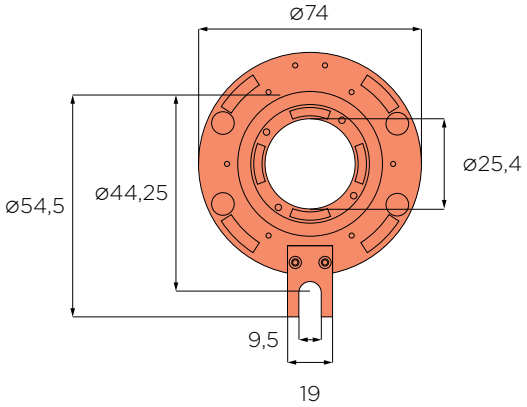

SVTS E 01

Custom cable length increase possible as multiples of 500mm

All dimensions in millimeters, unless otherwise specified

SVTS E 02

Model	Number of circuits			Dimensions	
	Total	Power		Inside ⌀ (trough-bore)	*L*
		20A	40A		
SVTS E 02-R-A-03/00-...-001	3	3	-	38,1	55
SVTS E 02-R-A-03/00-...-002	3	-	3	38,1	55

Transmission of	
Electric	Fluidic (combined solutions)
Signals	Air
Power	Oil
	Gas
	Water

Customisations		
Cables		

All dimensions in millimeters, unless otherwise specified

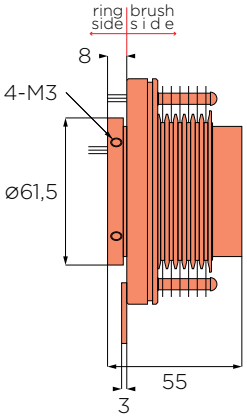

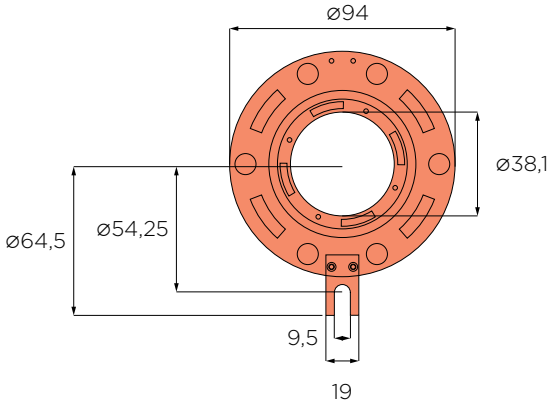

SVTS E 02

Custom cable length increase possible as multiples of 500mm

All dimensions in millimeters, unless otherwise specified

SVTS E 03

Model	Number of circuits				Dimensions	
	Total	Power			Inside ⌀ (trough-bore)	*L*
		20A	40A	60A		
SVTS E 03-R-A-03/00-...-001	3	3	-	-	50	70
SVTS E 03-R-A-03/00-...-002	3	-	3	-	50	70
SVTS E 03-R-A-03/00-...-003	3	-	-	3	50	70

Transmission of	
Electric	Fluidic (combined solutions)
Signals	Air
Power	Oil
	Gas
	Water

Customisations		
Cables		

All dimensions in millimeters, unless otherwise specified

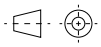

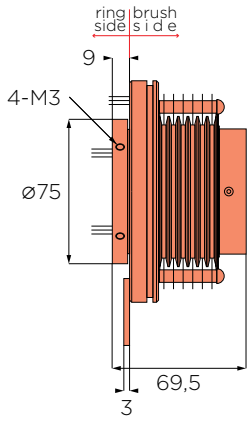

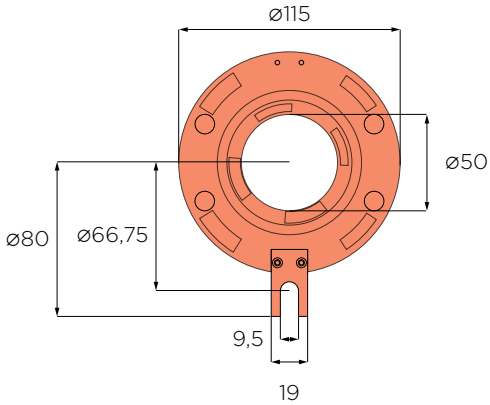

SVTS E 03

Custom cable length increase possible as multiples of 500mm

All dimensions in millimeters, unless otherwise specified

SVTS E 04

Model	Number of circuits				Dimensions	
	Total	Power			Inside ⌀ (trough-bore)	*L*
		20A	40A	60A		
SVTS E 04-R-A-03/00-...-001	3	3	-	-	60	78
SVTS E 04-R-A-03/00-...-002	3	-	3	-	60	78
SVTS E 04-R-A-03/00-...-003	3	-	-	3	60	78

Transmission of	
Electric	Fluidic (combined solutions)
Signals	Air
Power	Oil
	Gas
	Water

Customisations		
Cables		

All dimensions in millimeters, unless otherwise specified

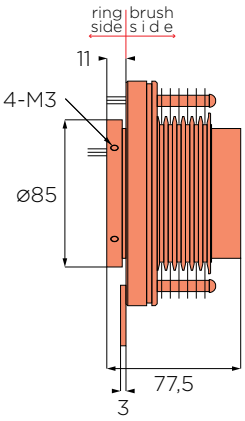

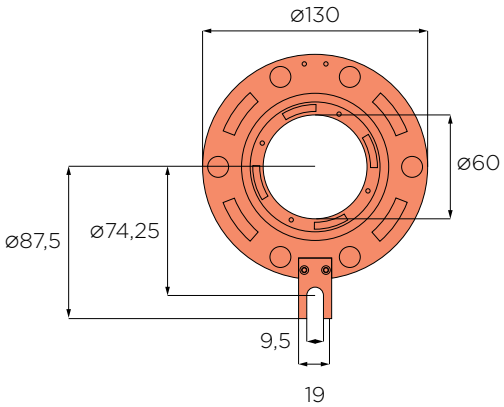

SVTS E 04

Custom cable length increase possible as multiples of 500mm

TDS Precision Products

TDS Precision Products GmbH
Industriestrasse 1a
CH-8157 Dielsdorf

T + 41 44 885 30 80
info@tds-pp.com
www.tds-pp.com

All dimensions in millimeters, unless otherwise specified