AGD301

3-Axis Controller with Integrated Drives

Datasheet

Rev.1.0

agito

www.agito-akribis.com

Member of Akribis Systems group

Product Description

AGD301 is a series of 3-axis, standalone, high performance programmable motion controllers with integrated servo amplifiers.

It is equipped with Ethernet, USB, CAN bus, RS232, and RS485 communication ports to interface with host devices such as PCs, PLCs, and HMIs. It can control any external driver via analog or digital command.

At 16 kHz sampling (profiler, position, velocity, and current control loops) frequency, AGD301 controllers are ideal for any tightly coordinated motion systems.

AGD301 has three integrated amplifiers, enabling it to drive three motors directly. It can drive all types of motors, such as steppers, voice coils, brushed or brushless motors, and including direct-drive linear and rotary motors.

Part Numbering

Product Description	Part Number Format
3-Axis Controller, Integrated Amplifiers	AGD301-ET-2Dxx[-ccc]

ET: Ethernet

2D: 12-90 VDC

xx: Continuous and peak current rating

- 05: (per axis) 5.6 A_{rms} continuous, 11.2A_{rms} peak
- 09: (per axis) 9.0 A_{rms} (up to 20 A_{rms} for 3 axes) continuous, 18.0 A_{rms} peak

ccc: Revision code or customized code (optional for standard variant).

Example: **AGD301-ET-2D09-001**, 9A_{rms} continuous, 18.0 A_{rms} peak current for each axis, with 16-bit analog input

System Design

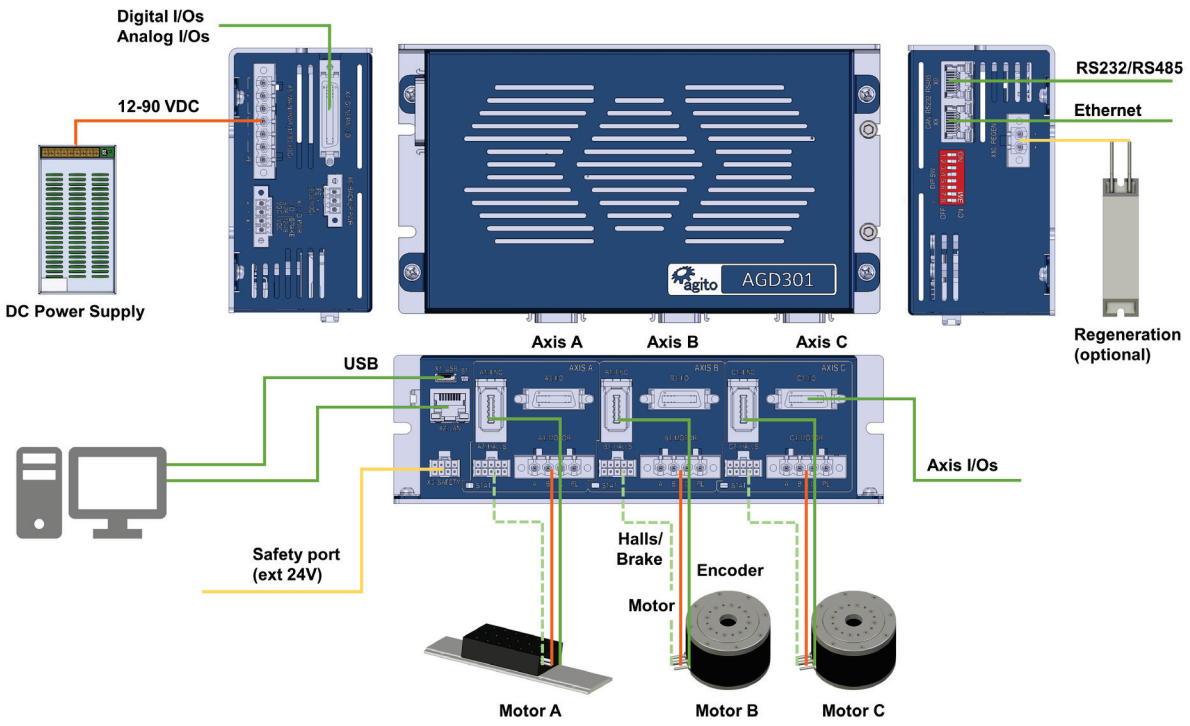

Technical Specifications

Electrical/Mechanical Specifications

Feature	AGD301-ET-2D05	AGD301-ET-2D09
Number of axes	3	
Power supply	12–90 VDC	
Logic power supply (optional) *	12–36 VDC	
Continuous output current (Internally limited by firmware)	5.6 A_{rms} per axis	9.0 A_{rms} per axis (20 A_{rms} max for 3 axes)
Peak output current (Internally limited by firmware)	11.2 A_{rms}	18.2 A_{rms}
Output power @ 90 VDC	504 kVA	810 kVA
Peak current time	3 sec	
Output frequency	0–599 Hz	
Isolated digital inputs	27	
Isolated digital outputs	17	
Bi-Directional Differential I/Os (RS422)	8	
Analog inputs	4 (12 bit)	
Analog outputs	4 (16 bit)	
Brake outputs	3	
Encoder ports	3	
Hall sensors ports	3	
Regeneration output	1	
Motor types	Voice coil, brushed or brushless linear or rotary motor. 2-phase steppers (open and closed loop, micro-stepping)	
Communication	Ethernet, CAN RS232, RS485, USB	
PWM frequency	16 kHz	
Power supply to external devices	Voltage: 5V Overall max. current: 1.5A	

Encoder Ports Specifications

Feature	Specification
Encoder types	Incremental AqB, Sin/Cos, Absolute EnDat 2.2, Absolute BiSS-C
Power supply to encoder	0.5 A per encoder port
Max. cable length	40 m
Incremental encoder	Hardware: Differential RS422/RS485 Max. input frequency: 6.25 MHz Termination: 120 Ω Commutation: Auto-phasing, Hall sensors
Sin/Cos encoder (on Main Encoder port only)	Hardware: Differential RS422/RS485, 1V pkp @2.5V Max. input frequency: 250 kHz Termination: 120 Ω Max interpolation: 13 bits (x 8192) Commutation: Auto-phasing, Hall sensors
Absolute BiSS-C	Hardware: Differential RS422/RS485, clock (MA), data (SLO) Clock frequency: 2 MHz Max. position bits: 32 bits Commutation: Auto-phasing, by absolute offset
Absolute EnDat 2.2	Hardware: Differential RS422/RS485, clock, data Clock frequency: 2 MHz Max. position bits: 32 bits Commutation: Auto-phasing, by absolute offset
Hall sensors	Opto-isolated 5V with internal power supply

I/O Specifications

Feature	Specification
Power supply for optically isolated I/Os	Voltage: 5–28 VDC
Optically isolated digital inputs	Type: PNP/NPN Propagation delay: 10 µs Max. frequency: 100 kHz Functionality: limit switches, home, captures, start motion, gain scheduling, and others
Optically isolated digital outputs	Type: PNP/NPN Max current: 0.5A (for NPN type), 0.3A (for PNP type) Propagation delay: 10 µs Max. frequency: 100 kHz Functionality: alarm, in-position, event (PEG), and others
Bi-directional differential I/O	Hardware: Differential RS422 Termination: 120 Ω Propagation delay: 100 ns Max. frequency: 5 MHz Direction: Input or output, set by Agito PCSuite Functionality: Any differential input or output functionality.
Analog inputs	Operational voltage: ±12V Resolution: 12 bit or 16 bit
Analog outputs	Operational voltage: ±12V Resolution: 16 bit
Static brake output	Operational voltage: 24V Maximum current: 3A

Environmental Specifications

Feature	Specification
Operating temperature	0°C to 50°C
Storage temperature	-20°C to 70°C
Operating humidity	< 90%
Operating conditions	Protection class: IP20

Dimensions and Weight

Feature	Specification
Unit dimensions (max)	H=57 mm, W=188 mm, D=105 mm
Package dimensions	H=70 mm, W=235 mm, D = 145 mm
Unit weight	0.4 kg
Shipping weight	0.5 kg

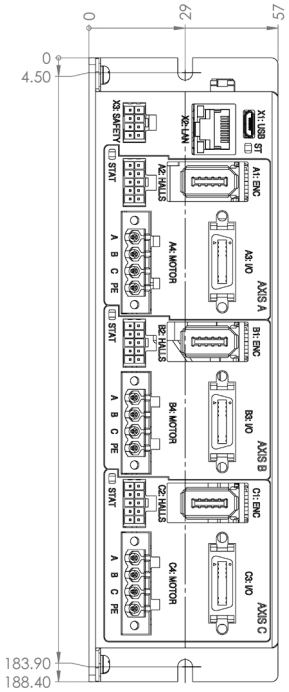

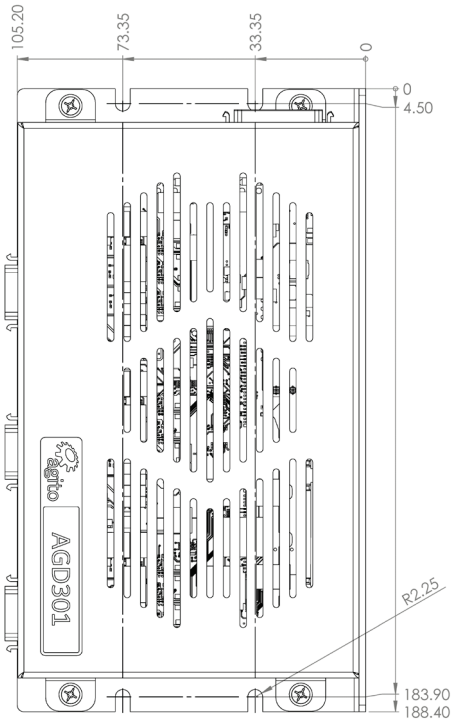

Motion Control Specifications

Feature	Specification
Key Features	▪ Encoder error mapping: 1D, 2D or 3D ▪ Auto-loop shaping (auto-tuning) ▪ Frequency domain system identification and modeling ▪ Flexible gain scheduling based on motion conditions ▪ Position lock and event ▪ Advanced Auto-tuning algorithm in frequency domain ▪ Force control and mode switching
Advanced Features	▪ Ultra Precision mode (UPM) ▪ Input-shaping ▪ Profile-shaping ▪ Machine vibration control with external sensor ▪ Spring and friction compensation ▪ Active-yaw gantry control
Control Sampling Rate	16 kHz (profiler, position, velocity, optional force, current)
Motion Modes	▪ Point-to-point ▪ Repetitive ▪ CNC sequential contour (G-codes) ▪ Vector and tracking motion modes ▪ Jog ▪ ECAM ▪ Gearing ▪ Joystick ▪ Handwheel ▪ Pulse and direction
Operational Modes	▪ Position ▪ Velocity ▪ Force ▪ Current (torque) modes
Motion Modes Switching	Motion parameters, such as speed, acceleration, deceleration, and target position can be all modified on-the-fly
Programming Interfaces	▪ Standalone user programs ▪ Multi-threaded with priority setting environment, up to 8 threads ▪ Execution time: 50 low script commands in 1 millisecond ▪ High level C-language-like script programming language integrated in Agito PCSuite
IDE and Host Interfaces	▪ Windows PC Suite IDE and configuration software ▪ Windows .NET API available in NuGet package manager ▪ Linux .NET API ▪ The API can also be used in MATLAB, LabVIEW and other environments compatible with Windows .NET ▪ Standard TCP/IP communication ▪ ASCII string commands or binary CAN format