TDS Precision Products

TDS Precision Products GmbH
Industriestrasse 1a
CH-8157 Dielsdorf

T + 41 44 885 30 80
info@tds-pp.com
www.tds-pp.com

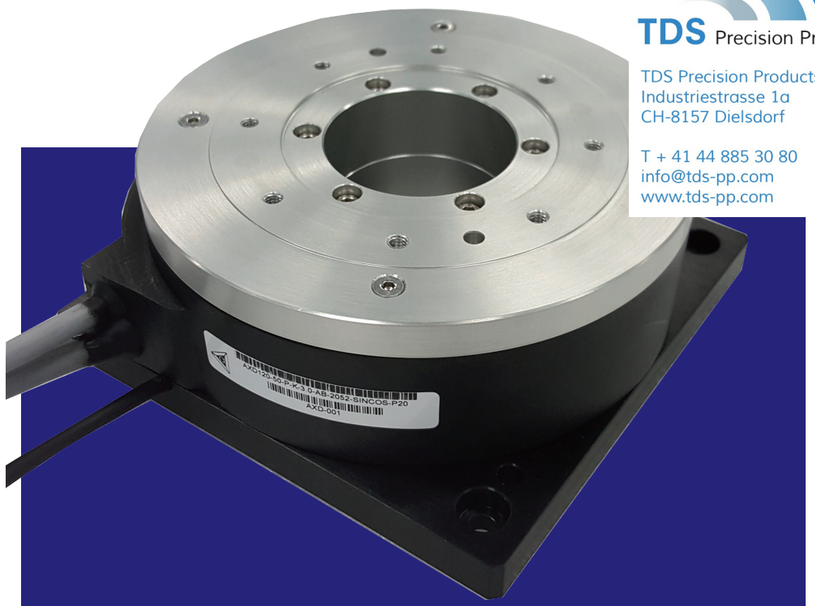

# AXD SERIES

- Direct drive and brushless motor
- Fully integrated with encoder and bearing
- Low cogging torque
- Precise homing through index pulse
- Optional for low speed and high speed windings
- High torque density
- Low profile with large centre hole
- Flat design



## AXD80-50

| AXD80-50 | | | | |
|---|---|---|---|---|
| **Performance Parameters** | **Symbol** | **Unit** | **Series** | **Parallel** |
| Continuous Torque (NC) @100°C❶ | $T_{cn}$ | Nm | 0.9 | 0.9 |
| Peak Torque | $T_{pk}$ | Nm | 2.6 | 2.6 |
| Torque Constant ±10% | $K_t$ | Nm/Arms | 0.91 | 0.46 |
| Back EMF Constant ±10% | $K_e$ | Vpeak/rpm | 0.078 | 0.039 |
| Motor Constant @25°C | $K_m$ | Nm/Sqrt(W) | 0.25 | 0.25 |
| Resistance (L-L) @25°C ±10%❷ | $R_{25}$ | Ω | 9.1 | 2.3 |
| Inductance (L-L) ±20%❸ | L | mH | 28.1 | 7.0 |
| Electrical Time Constant | $\tau_e$ | ms | 3.1 | 3.1 |
| Continuous Current (NC) @100°C❶ | $I_{cn}$ | Arms | 0.9 | 1.9 |
| Peak Current | $I_{pk}$ | Arms | 3.4 | 6.8 |
| Continuous Power Dissipation (NC) @100°C❶ | $P_{cn}$ | W | 15.6 | 15.6 |
| Max. Coil Temperature | $t_{max}$ | °C | 100 | 100 |
| Thermal Dissipation Constant (NC)❶ | $K_{thn}$ | W/°C | 0.2 | 0.2 |
| Max. Bus Voltage | $U_{bus}$ | Vdc | 330 | 330 |
| Pole Number | 2P | - | 14 | 14 |
| Max Speed❹ | $\Omega_{max}$ | rpm | 1500 | 3000 |
| **Mechanical Parameters** | | | | |
| Overall Mass (NC) | $m_n$ | kg | 1.35 | 1.35 |
| Rotor Inertia | $J_r$ | kg·m² | 1.82E-04 | 1.82E-04 |
| Axial Runout❺ | - | μm | 15 | 15 |
| Radial Runout❺ | - | μm | 15 | 15 |
| Max Axial Load (Upright Mounting)❻ | - | N | 350 | 350 |
| Max Axial Load (Inverted / Wall Mounting) | - | N | 100 | 100 |
| Max Moment Load (Upright Mounting) | - | Nm | 10 | 10 |
| Max Moment Load (Inverted / Wall Mounting) | - | Nm | 3 | 3 |
| **Encoder Parameters** | | | | |
| ABI Optical Incremental Encoder (SIN/COS) | - | lines / rev | 1062 | 1062 |
| ABI Optical Incremental Encoder (80x) | - | counts / rev | 84960 | 84960 |
| ABI Optical Incremental Encoder (160x) | - | counts / rev | 169920 | 169920 |
| ABI Optical Incremental Encoder (400x) | - | counts / rev | 424800 | 424800 |
| Accuracy after Error Mapping❼ | - | arc sec | +/-12 | +/-12 |
| Repeatability❼ | - | arc sec | +/-6 | +/-6 |
| **Other Information** | | | | |
| Insulation Class | | Class A (105°C) | | |
| Protection Grade | | IP40 | | |
| Compliance with Global Standards | | RoHS, CE | | |
| Ambient Temperature | Operation | 0°C to 40°C (non-freezing) | | |
| | Storage | -15°C to 70°C (non-freezing) | | |
| Ambient Humidity | Operation | 10%RH to 80%RH (non-condensing) | | |
| | Storage | 10%RH to 90%RH (non-condensing) | | |
| Recommended Ambience | | Indoor (no direct sunlight); No corrosive gas, inflammable gas, oil mist or dust. | | |

❶ Measurement is taken at ambient temperature 25°C. Value depends on the thermal environment.
❷ Resistance is measured by DC current with standard 3 m cable.
❸ Inductance is measured by current frequency of 1 kHz.
❹ The value is based on ABI optical SIN/COS encoder (4096x interpolation) under max. bus voltage.
❺ The runout value in parenthesis is optional.
❻ Please refer to the illustration for different mountings.
❼ Based on ABI optical SIN/COS encoder (4096x interpolation) with standard runout.
**The contents of datasheet are subjected to change without prior notice.**

### Torque-Speed Curve

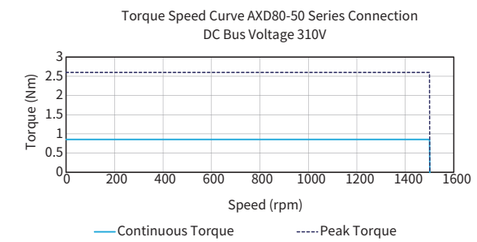


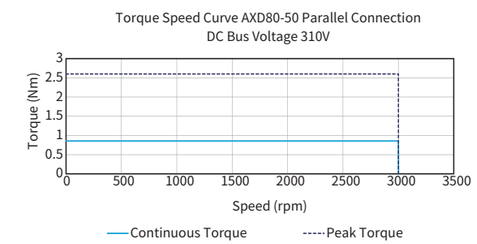


**Mounting Illustration**

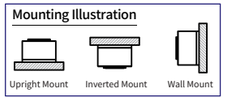


### Dimension

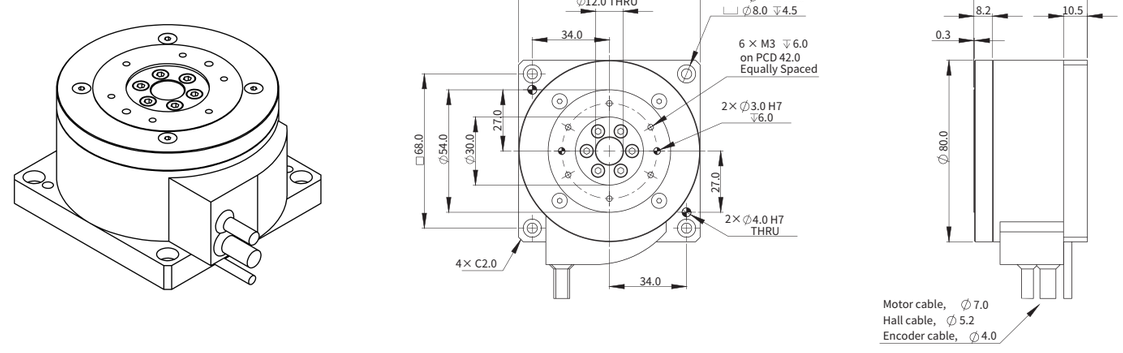

# AXD120-50

| AXD120-50 | | | | |
|---|---|---|---|---|
| **Performance Parameters** | Symbol | Unit | Series | Parallel |
| Continuous Torque (NC) @100°C[1] | $T_{cn}$ | Nm | 3.4 | 3.4 |
| Peak Torque | $T_{pk}$ | Nm | 10.0 | 10.0 |
| Torque Constant ±10% | $K_t$ | Nm/Arms | 3.04 | 1.52 |
| Back EMF Constant ±10% | $K_e$ | Vpeak/rpm | 0.26 | 0.13 |
| Motor Constant @25°C | $K_m$ | Nm/Sqrt(W) | 0.64 | 0.64 |
| Resistance (L-L) @25°C ±10%[2] | $R_{25}$ | Ω | 15.2 | 3.8 |
| Inductance (L-L) ±20%[3] | L | mH | 47.7 | 11.9 |
| Electrical Time Constant | $\tau_e$ | ms | 3.1 | 3.1 |
| Continuous Current (NC) @100°C[1] | $I_{cn}$ | Arms | 1.1 | 2.2 |
| Peak Current | $I_{pk}$ | Arms | 3.9 | 7.8 |
| Continuous Power Dissipation (NC) @100°C[1] | $P_{cn}$ | W | 36.4 | 36.4 |
| Max. Coil Temperature | $t_{max}$ | °C | 100 | 100 |
| Thermal Dissipation Constant (NC)[1] | $K_{thn}$ | W/°C | 0.5 | 0.5 |
| Max. Bus Voltage | $U_{bus}$ | Vdc | 330 | 330 |
| Pole Number | 2P | - | 14 | 14 |
| Max Speed[4] | $\Omega_{max}$ | rpm | 800 | 1700 |
| **Mechanical Parameters** | | | | |
| Overall Mass (NC) | $m_n$ | kg | 2.6 | 2.6 |
| Rotor Inertia | $J_r$ | kg · m² | 1.02E-03 | 1.02E-03 |
| Axial Runout[5] | - | μm | 20 | 20 |
| Radial Runout[5] | - | μm | 20 | 20 |
| Max Axial Load (Upright Mounting)[6] | - | N | 500 | 500 |
| Max Axial Load (Inverted / Wall Mounting) | - | N | 150 | 150 |
| Max Moment Load (Upright Mounting) | - | Nm | 30 | 30 |
| Max Moment Load (Inverted / Wall Mounting) | - | Nm | 10 | 10 |
| **Encoder Parameters** | | | | |
| ABI Optical Incremental Encoder (SIN/COS) | - | lines / rev | 2052 | 2052 |
| ABI Optical Incremental Encoder (80x) | - | counts / rev | 164160 | 164160 |
| ABI Optical Incremental Encoder (160x) | - | counts / rev | 328320 | 328320 |
| ABI Optical Incremental Encoder (400x) | - | counts / rev | 820800 | 820800 |
| Accuracy after Error Mapping[7] | - | arc sec | +/-6 | +/-6 |
| Repeatability[7] | - | arc sec | +/-3 | +/-3 |
| **Other Information** | | | | |
| Insulation Class | | Class A (105°C) | | |
| Protection Grade | | IP40 | | |
| Compliance with Global Standards | | RoHS, CE | | |
| Ambient Temperature | Operation | 0°C to 40°C (non-freezing) | | |
| | Storage | -15°C to 70°C (non-freezing) | | |
| Ambient Humidity | Operation | 10%RH to 80%RH (non-condensing) | | |
| | Storage | 10%RH to 90%RH (non-condensing) | | |
| Recommended Ambience | | Indoor (no direct sunlight);<br>No corrosive gas, inflammable gas, oil mist or dust. | | |

[1] Measurement is taken at ambient temperature 25°C. Value depends on the thermal environment.
[2] Resistance is measured by DC current with standard 3 m cable.
[3] Inductance is measured by current frequency of 1 kHz.
[4] The value is based on ABI optical SIN/COS encoder (4096x interpolation) under max. bus voltage.
[5] The runout value in parenthesis is optional.
[6] Please refer to the illustration for different mountings.
[7] Based on ABI optical SIN/COS encoder (4096x interpolation) with standard runout.
**The contents of datasheet are subjected to change without prior notice.**

## ■ Torque-Speed Curve

Torque Speed Curve AXD120-50 Series Connection
DC Bus Voltage 310V

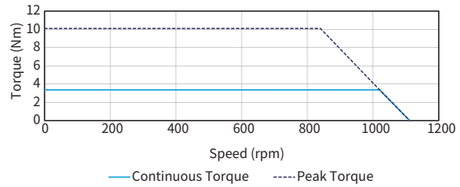


Torque Speed Curve AXD120-50 Parallel Connection
DC Bus Voltage 310V

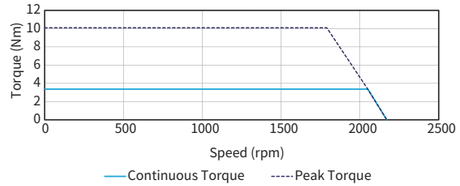


**Mounting Illustration**

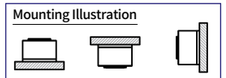


## ■ Dimension

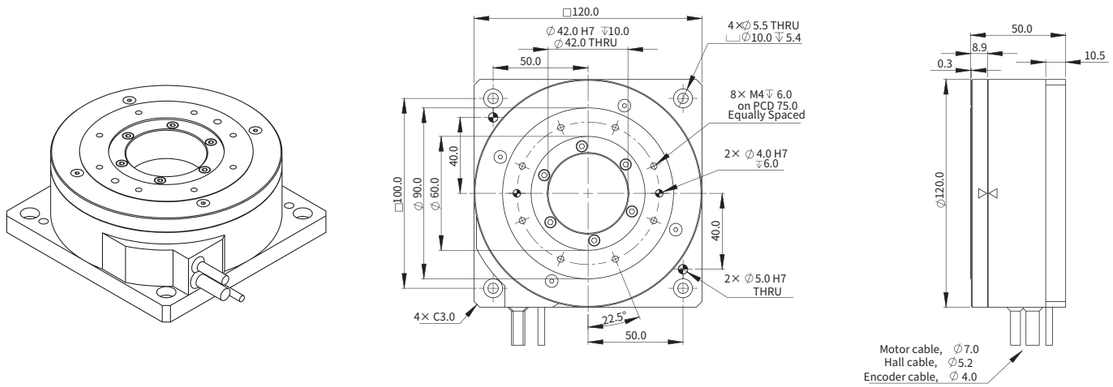






# AXD160-55

| AXD160-55 | | | | |
|---|---|---|---|---|
| **Performance Parameters** | Symbol | Unit | Series | Parallel |
| Continuous Torque (NC) @100°C[1] | $T_{cn}$ | Nm | 9.4 | 9.4 |
| Peak Torque | $T_{pk}$ | Nm | 27.0 | 27.0 |
| Torque Constant ±10% | $K_t$ | Nm/Arms | 5.85 | 2.93 |
| Back EMF Constant ±10% | $K_e$ | Vpeak/rpm | 0.50 | 0.25 |
| Motor Constant @25°C | $K_m$ | Nm/Sqrt(W) | 1.24 | 1.24 |
| Resistance (L-L) @25°C ±10%[2] | $R_{25}$ | Ω | 14.9 | 3.7 |
| Inductance (L-L) ±20%[3] | L | mH | 92.1 | 23.0 |
| Electrical Time Constant | $\tau_e$ | ms | 6.2 | 6.2 |
| Continuous Current (NC) @100°C[1] | $I_{cn}$ | Arms | 1.6 | 3.2 |
| Peak Current | $I_{pk}$ | Arms | 5.8 | 11.5 |
| Continuous Power Dissipation (NC) @100°C[1] | $P_{cn}$ | W | 74.0 | 74.0 |
| Max. Coil Temperature | $t_{max}$ | °C | 100 | 100 |
| Thermal Dissipation Constant (NC)[1] | $K_{thn}$ | W/°C | 1.0 | 1.0 |
| Max. Bus Voltage | $U_{bus}$ | Vdc | 330 | 330 |
| Pole Number | 2P | - | 14 | 14 |
| Max Speed[4] | $\Omega_{max}$ | rpm | 330 | 800 |
| **Mechanical Parameters** | | | | |
| Overall Mass (NC) | $m_n$ | kg | 5.1 | 5.1 |
| Rotor Inertia | $J_r$ | kg · m² | 3.72E-03 | 3.72E-03 |
| Axial Runout[5] | - | μm | 30 | 30 |
| Radial Runout[5] | - | μm | 30 | 30 |
| Max Axial Load (Upright Mounting)[6] | - | N | 750 | 750 |
| Max Axial Load (Inverted / Wall Mounting) | - | N | 225 | 225 |
| Max Moment Load (Upright Mounting) | - | Nm | 40 | 40 |
| Max Moment Load (Inverted / Wall Mounting) | - | Nm | 12 | 12 |
| **Encoder Parameters** | | | | |
| ABI Optical Incremental Encoder (SIN/COS) | - | lines / rev | 2868 | 2868 |
| ABI Optical Incremental Encoder (80x) | - | counts / rev | 229440 | 229440 |
| ABI Optical Incremental Encoder (160x) | - | counts / rev | 458880 | 458880 |
| ABI Optical Incremental Encoder (400x) | - | counts / rev | 1147200 | 1147200 |
| Accuracy after Error Mapping[7] | - | arc sec | +/-5 | +/-5 |
| Repeatability[7] | - | arc sec | +/-2.5 | +/-2.5 |
| **Other Information** | | | | |
| Insulation Class | | Class A (105°C) | | |
| Protection Grade | | IP40 | | |
| Compliance with Global Standards | | RoHS, CE | | |
| Ambient Temperature | Operation | 0°C to 40°C (non-freezing) | | |
| | Storage | -15°C to 70°C (non-freezing) | | |
| Ambient Humidity | Operation | 10%RH to 80%RH (non-condensing) | | |
| | Storage | 10%RH to 90%RH (non-condensing) | | |
| Recommended Ambience | | Indoor (no direct sunlight);<br>No corrosive gas, inflammable gas, oil mist or dust. | | |

[1] Measurement is taken at ambient temperature 25°C. Value depends on the thermal environment.
[2] Resistance is measured by DC current with standard 3 m cable.
[3] Inductance is measured by current frequency of 1 kHz.
[4] The value is based on ABI optical SIN/COS encoder (4096x interpolation) under max. bus voltage.
[5] The runout value in parenthesis is optional.
[6] Please refer to the illustration for different mountings.
[7] Based on ABI optical SIN/COS encoder (4096x interpolation) with standard runout.
**The contents of datasheet are subjected to change without prior notice.**

## ■ Torque-Speed Curve

Torque Speed Curve AXD160-55 Series Connection
DC Bus Voltage 310V

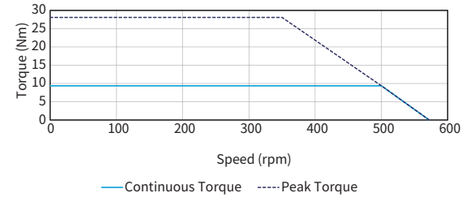


Torque Speed Curve AXD160- 55 Parallel Connection
DC Bus Voltage 310V

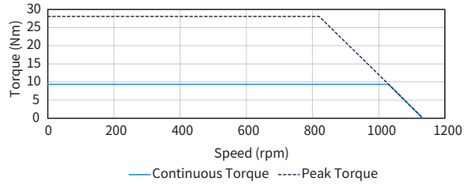


**Mounting Illustration**

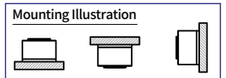


## ■ Dimension

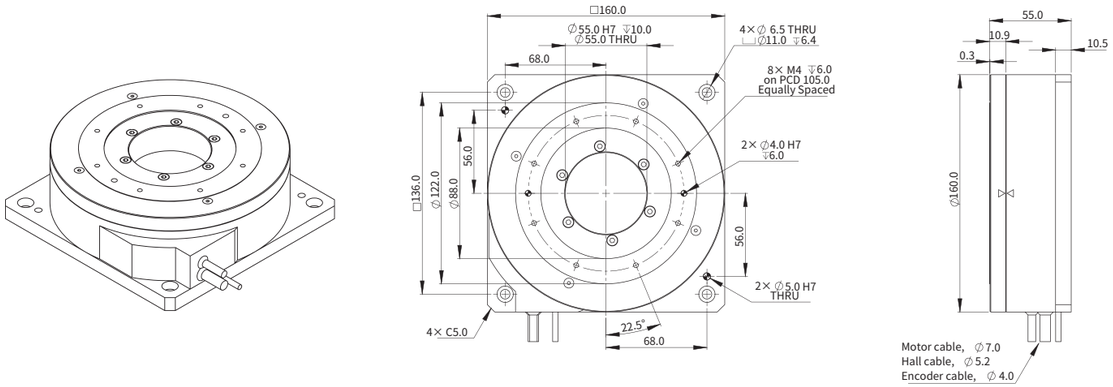

# AXD200-65

| AXD200-65 | | | | |
|---|---|---|---|---|
| **Performance Parameters** | Symbol | Unit | Series | Parallel |
| Continuous Torque (NC) @100°C❶ | $T_{cn}$ | Nm | 18.8 | 18.8 |
| Peak Torque | $T_{pk}$ | Nm | 54.3 | 54.3 |
| Torque Constant ±10% | $K_t$ | Nm/Arms | 9.42 | 4.71 |
| Back EMF Constant ±10% | $K_e$ | Vpeak/rpm | 0.81 | 0.40 |
| Motor Constant @25°C | $K_m$ | Nm/Sqrt(W) | 2.13 | 2.13 |
| Resistance (L-L) @25°C ±10%❷ | $R_{25}$ | Ω | 13.0 | 3.3 |
| Inductance (L-L) ±20%❸ | L | mH | 121.0 | 30.3 |
| Electrical Time Constant | $\tau_e$ | ms | 9.3 | 9.3 |
| Continuous Current (NC) @100°C❶ | $I_{cn}$ | Arms | 2.0 | 4.0 |
| Peak Current | $I_{pk}$ | Arms | 7.2 | 14.4 |
| Continuous Power Dissipation (NC) @100°C❶ | $P_{cn}$ | W | 100.9 | 100.9 |
| Max. Coil Temperature | $t_{max}$ | °C | 100 | 100 |
| Thermal Dissipation Constant (NC)❶ | $K_{thn}$ | W/°C | 1.3 | 1.3 |
| Max. Bus Voltage | $U_{bus}$ | Vdc | 330 | 330 |
| Pole Number | 2P | - | 14 | 14 |
| Max Speed❹ | $\Omega_{max}$ | rpm | 200 | 490 |
| **Mechanical Parameters** | | | | |
| Overall Mass (NC) | $m_n$ | kg | 8.3 | 8.3 |
| Rotor Inertia | $J_r$ | kg·m² | 1.00E-02 | 1.00E-02 |
| Axial Runout❺ | - | μm | 40 | 40 |
| Radial Runout❺ | - | μm | 40 | 40 |
| Max Axial Load (Upright Mounting)❻ | - | N | 1000 | 1000 |
| Max Axial Load (Inverted / Wall Mounting) | - | N | 300 | 300 |
| Max Moment Load (Upright Mounting) | - | Nm | 50 | 50 |
| Max Moment Load (Inverted / Wall Mounting) | - | Nm | 15 | 15 |
| **Encoder Parameters** | | | | |
| ABI Optical Incremental Encoder (SIN/COS) | - | lines / rev | 3934 | 3934 |
| ABI Optical Incremental Encoder (80x) | - | counts / rev | 314720 | 314720 |
| ABI Optical Incremental Encoder (160x) | - | counts / rev | 629440 | 629440 |
| ABI Optical Incremental Encoder (400x) | - | counts / rev | 1573600 | 1573600 |
| Accuracy after Error Mapping❼ | - | arc sec | +/-4 | +/-4 |
| Repeatability❼ | - | arc sec | +/-2 | +/-2 |
| **Other Information** | | | | |
| Insulation Class | | Class A (105°C) | | |
| Protection Grade | | IP40 | | |
| Compliance with Global Standards | | RoHS, CE | | |
| Ambient Temperature | Operation | 0°C to 40°C (non-freezing) | | |
| | Storage | -15°C to 70°C (non-freezing) | | |
| Ambient Humidity | Operation | 10%RH to 80%RH (non-condensing) | | |
| | Storage | 10%RH to 90%RH (non-condensing) | | |
| Recommended Ambience | | Indoor (no direct sunlight); No corrosive gas, inflammable gas, oil mist or dust. | | |

❶ Measurement is taken at ambient temperature 25°C. Value depends on the thermal environment.
❷ Resistance is measured by DC current with standard 3 m cable.
❸ Inductance is measured by current frequency of 1 kHz.
❹ The value is based on ABI optical SIN/COS encoder (4096x interpolation) under max. bus voltage.
❺ The runout value in parenthesis is optional.
❻ Please refer to the illustration for different mountings.
❼ Based on ABI optical SIN/COS encoder (4096x interpolation) with standard runout.
**The contents of datasheet are subjected to change without prior notice.**

## ■ Torque-Speed Curve

Torque Speed Curve AXD200- 65 Series Connection
DC Bus Voltage 310V

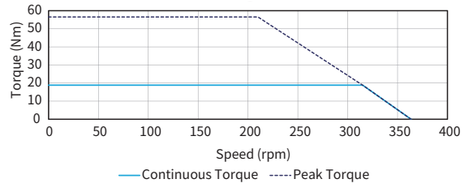


Torque Speed Curve AXD200- 65 Parallel Connection
DC Bus Voltage 310V

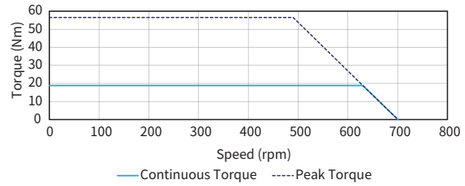


**Mounting Illustration**

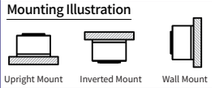


## ■ Dimension

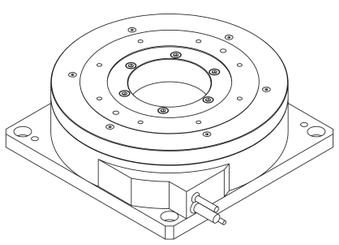

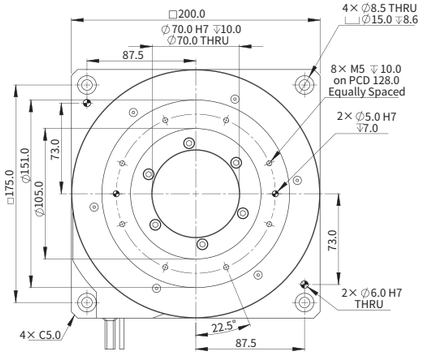


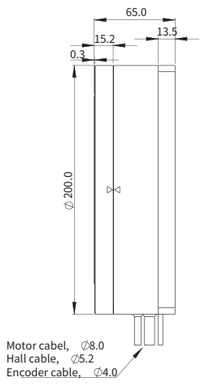






# AXD280-90

| AXD280-90 | | | | |
|---|---|---|---|---|
| **Performance Parameters** | Symbol | Unit | Series | Parallel |
| Continuous Torque (NC) @100°C❶ | $T_{cn}$ | Nm | 51.1 | 51.1 |
| Peak Torque | $T_{pk}$ | Nm | 150.3 | 150.3 |
| Torque Constant ±10% | $K_t$ | Nm/Arms | 22.23 | 11.12 |
| Back EMF Constant ±10% | $K_e$ | Vpeak/rpm | 1.90 | 0.95 |
| Motor Constant @25°C | $K_m$ | Nm/Sqrt(W) | 4.34 | 4.34 |
| Resistance (L-L) @25°C ±10%❷ | $R_{25}$ | Ω | 17.5 | 4.4 |
| Inductance (L-L) ±20%❸ | L | mH | 194.0 | 48.5 |
| Electrical Time Constant | $\tau_e$ | ms | 11.1 | 11.1 |
| Continuous Current (NC) @100°C❶ | $I_{cn}$ | Arms | 2.3 | 4.6 |
| Peak Current | $I_{pk}$ | Arms | 8.0 | 16.0 |
| Continuous Power Dissipation (NC) @100°C❶ | $P_{cn}$ | W | 179.7 | 179.7 |
| Max. Coil Temperature | $t_{max}$ | °C | 100 | 100 |
| Thermal Dissipation Constant (NC)❶ | $K_{thn}$ | W/°C | 2.4 | 2.4 |
| Max. Bus Voltage | $U_{bus}$ | Vdc | 330 | 330 |
| Pole Number | 2P | - | 28 | 28 |
| Max Speed❹ | $\Omega_{max}$ | rpm | 60 | 180 |
| **Mechanical Parameters** | | | | |
| Overall Mass (NC) | $m_n$ | kg | 21.0 | 21.0 |
| Rotor Inertia | $J_r$ | kg·m² | 6.00E-02 | 6.00E-02 |
| Axial Runout❺ | - | μm | 50 | 50 |
| Radial Runout❺ | - | μm | 50 | 50 |
| Max Axial Load (Upright Mounting)❻ | - | N | 1800 | 1800 |
| Max Axial Load (Inverted / Wall Mounting) | - | N | 500 | 500 |
| Max Moment Load (Upright Mounting) | - | Nm | 75 | 75 |
| Max Moment Load (Inverted / Wall Mounting) | - | Nm | 23 | 23 |
| **Encoder Parameters** | | | | |
| ABI Optical Incremental Encoder (SIN/COS) | - | lines / rev | 5560 | 5560 |
| ABI Optical Incremental Encoder (80x) | - | counts / rev | 444800 | 444800 |
| ABI Optical Incremental Encoder (160x) | - | counts / rev | 889600 | 889600 |
| ABI Optical Incremental Encoder (400x) | - | counts / rev | 2224000 | 2224000 |
| Accuracy after Error Mapping❼ | - | arc sec | +/-4 | +/-4 |
| Repeatability❼ | - | arc sec | +/-2 | +/-2 |
| **Other Information** | | | | |
| Insulation Class | | Class A (105°C) | | |
| Protection Grade | | IP40 | | |
| Compliance with Global Standards | | RoHS, CE | | |
| Ambient Temperature | Operation | 0°C to 40°C (non-freezing) | | |
| | Storage | -15°C to 70°C (non-freezing) | | |
| Ambient Humidity | Operation | 10%RH to 80%RH (non-condensing) | | |
| | Storage | 10%RH to 90%RH (non-condensing) | | |
| Recommended Ambience | | Indoor (no direct sunlight); No corrosive gas, inflammable gas, oil mist or dust. | | |

❶ Measurement is taken at ambient temperature 25°C. Value depends on the thermal environment.
❷ Resistance is measured by DC current with standard 3 m cable.
❸ Inductance is measured by current frequency of 1 kHz.
❹ The value is based on ABI optical SIN/COS encoder (4096x interpolation) under max. bus voltage.
❺ The runout value in parenthesis is optional.
❻ Please refer to the illustration for different mountings.
❼ Based on ABI optical SIN/COS encoder (4096x interpolation) with standard runout.
**The contents of datasheet are subjected to change without prior notice.**

## ■ Torque-Speed Curve

Torque Speed Curve AXD280-90 Series Connection
DC Bus Voltage 310V

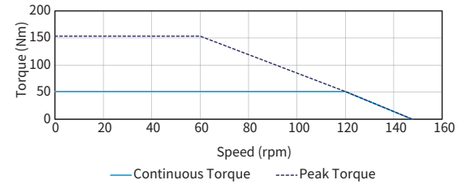


Torque Speed Curve AXD280-90 Parallel Connection
DC Bus Voltage 310V

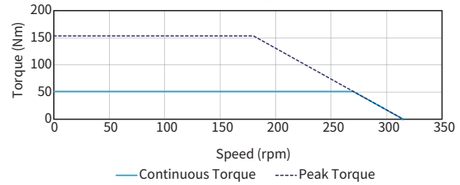


**Mounting Illustration**

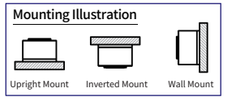


## ■ Dimension

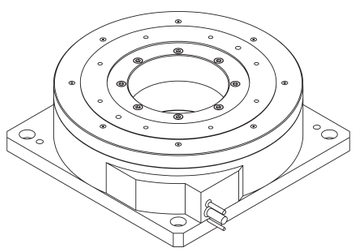

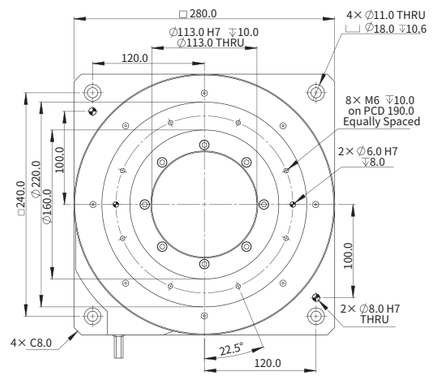


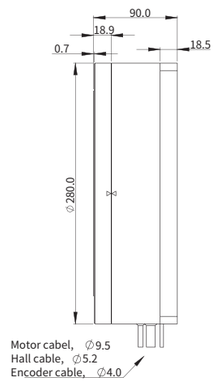

# AXD400-155

| AXD400-155 | | | | |
|---|---|---|---|---|
| **Performance Parameters** | Symbol | Unit | Series | Parallel |
| Continuous Torque (NC) @100°C[1] | $T_{cn}$ | Nm | 250.6 | 250.6 |
| Peak Torque | $T_{pk}$ | Nm | 648.9 | 648.9 |
| Torque Constant ±10% | $K_t$ | Nm/Arms | 35.80 | 17.90 |
| Back EMF Constant ±10% | $K_e$ | Vpeak/rpm | 3.06 | 1.53 |
| Motor Constant @25°C | $K_m$ | Nm/Sqrt(W) | 15.62 | 15.62 |
| Resistance (L-L) @25°C ±10%[2] | $R_{25}$ | Ω | 3.5 | 0.875 |
| Inductance (L-L) ±20%[3] | L | mH | 74.0 | 18.5 |
| Electrical Time Constant | $\tau_e$ | ms | 21.1 | 21.1 |
| Continuous Current (NC) @100°C[1] | $I_{cn}$ | Arms | 7.0 | 14.0 |
| Peak Current | $I_{pk}$ | Arms | 25.0 | 50.0 |
| Continuous Power Dissipation (NC) @100°C[1] | $P_{cn}$ | W | 332.9 | 332.9 |
| Max. Coil Temperature | $t_{max}$ | °C | 100 | 100 |
| Thermal Dissipation Constant (NC)[1] | $K_{thn}$ | W/°C | 4.4 | 4.4 |
| Max. Bus Voltage | $U_{bus}$ | Vdc | 330 | 330 |
| Pole Number | 2P | - | 28 | 28 |
| Max Speed[4] | $\Omega_{max}$ | rpm | 60 | 140 |
| **Mechanical Parameters** | | | | |
| Overall Mass (NC) | $m_n$ | kg | 80.0 | 80.0 |
| Rotor Inertia | $J_r$ | kg·m² | 5.12E-01 | 5.12E-01 |
| Axial Runout[5] | - | μm | 70 | 70 |
| Radial Runout[5] | - | μm | 70 | 70 |
| Max Axial Load (Upright Mounting)[6] | - | N | 8000 | 8000 |
| Max Axial Load (Inverted / Wall Mounting) | - | N | 1500 | 1500 |
| Max Moment Load (Upright Mounting) | - | Nm | 100 | 100 |
| Max Moment Load (Inverted / Wall Mounting) | - | Nm | 30 | 30 |
| **Encoder Parameters** | | | | |
| ABI Optical Incremental Encoder (SIN/COS) | - | lines / rev | 7500 | 7500 |
| ABI Optical Incremental Encoder (80x) | - | counts / rev | 600000 | 600000 |
| ABI Optical Incremental Encoder (160x) | - | counts / rev | 1200000 | 1200000 |
| ABI Optical Incremental Encoder (400x) | - | counts / rev | 3000000 | 3000000 |
| Accuracy after Error Mapping[7] | - | arc sec | +/-4 | +/-4 |
| Repeatability[7] | - | arc sec | +/-2 | +/-2 |
| **Other Information** | | | | |
| Insulation Class | | Class A (105°C) | | |
| Protection Grade | | IP40 | | |
| Compliance with Global Standards | | RoHS, CE | | |
| Ambient Temperature | Operation | 0°C to 40°C (non-freezing) | | |
| | Storage | -15°C to 70°C (non-freezing) | | |
| Ambient Humidity | Operation | 10%RH to 80%RH (non-condensing) | | |
| | Storage | 10%RH to 90%RH (non-condensing) | | |
| Recommended Ambience | | Indoor (no direct sunlight); No corrosive gas, inflammable gas, oil mist or dust. | | |

1. Measurement is taken at ambient temperature 25°C. Value depends on the thermal environment.
2. Resistance is measured by DC current with standard 3 m cable.
3. Inductance is measured by current frequency of 1 kHz.
4. The value is based on ABI optical SIN/COS encoder (4096x interpolation) under max. bus voltage.
5. The runout value in parenthesis is optional.
6. Please refer to the illustration for different mountings.
7. Based on ABI optical SIN/COS encoder (4096x interpolation) with standard runout.

**The contents of datasheet are subjected to change without prior notice.**

## Torque-Speed Curve

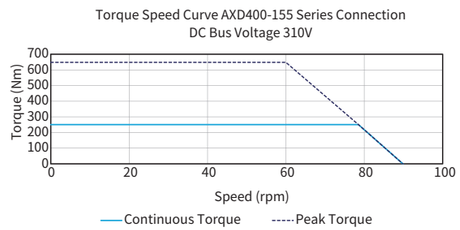


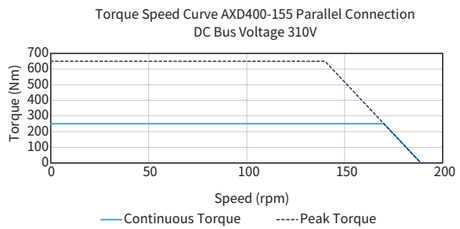


**Mounting Illustration**

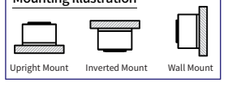


## Dimension

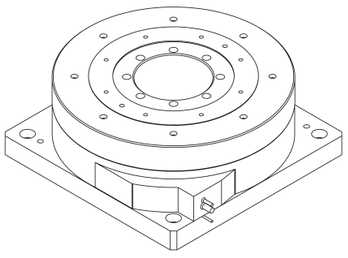

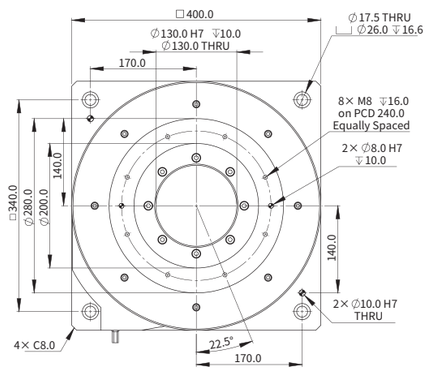


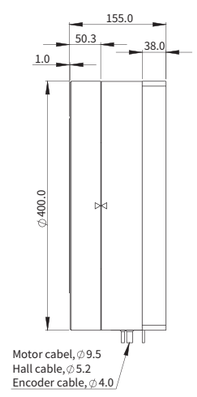






# Motor Cable Connection

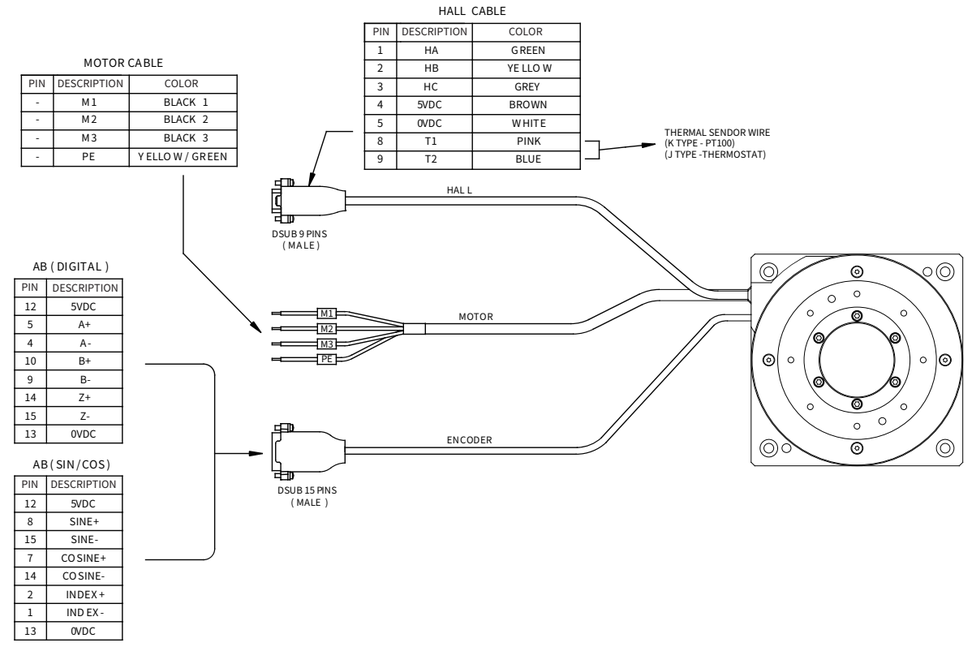


# Part Numbering

**AXD160-55-P-J-H9D-3.0-NFB-AB-2868-400X-P30**

Motor Model:
AXD80-50 / AXD120-50
AXD160-55 / AXD200-65
AXD280-90 / AXD400-155

Winding:
S = Series / P = Parallel

Thermal Sensor Options:
J-Thermostat (standard)
K-PT100(RTD)

Hall Cable Option:
NH[1] / H9D[2]

Cable length (m):
3.0

Runout:[4]
P15 / P20 / P30
P40 / P50 / P70

Interpolation Option:
80X / 160X / 400X / SINCOS

Encoder Option:
AXD80-50: AB-1062
AXD120-50: AB-2052
AXD160-55: AB-2868
AXD200-65: AB-3934
AXD280-90: AB-5560
AXD400-155: AB-7500

Motor Cable Option:
NFB[3]

1. NH = Without Built-in Hall Sensor but with Thermal Sensor.
2. H9D = With Built-in hall sensor, comes with 9-Pins D-Sub Connector.
3. NFB = Without ferrite bead.
4. AXD80:P15 = Axial Runout 15um, Radial Runout is 15um
   AXD120:P20 = Axial Runout 20um, Radial Runout is 20um
   AXD160:P30 = Axial Runout 30um, Radial Runout is 30um
   AXD200:P40 = Axial Runout 40um, Radial Runout is 40um
   AXD280:P50 = Axial Runout 50um, Radial Runout is 50um
   AXD400:P70 = Axial Runout 70um, Radial Runout is 70um

TDS Precision Products

TDS Precision Products GmbH
Industriestrasse 1a
CH-8157 Dielsdorf

T + 41 44 885 30 80
info@tds-pp.com
www.tds-pp.com