GEEPLUS Super Stroke Solenoid M250SS-XXv

TDS Precision Products
TDS Precision Products GmbH
Industriestrasse 1a
CH-8157 Dielsdorf
T + 41 44 885 30 80
info@tds-pp.com
www.tds-pp.com

Device drawn in energised condition
Life Expectancy >2M cycles
Leadwires UL1430, 22AWG
Plunger Mass 46 grammes
Mass 200 grammes

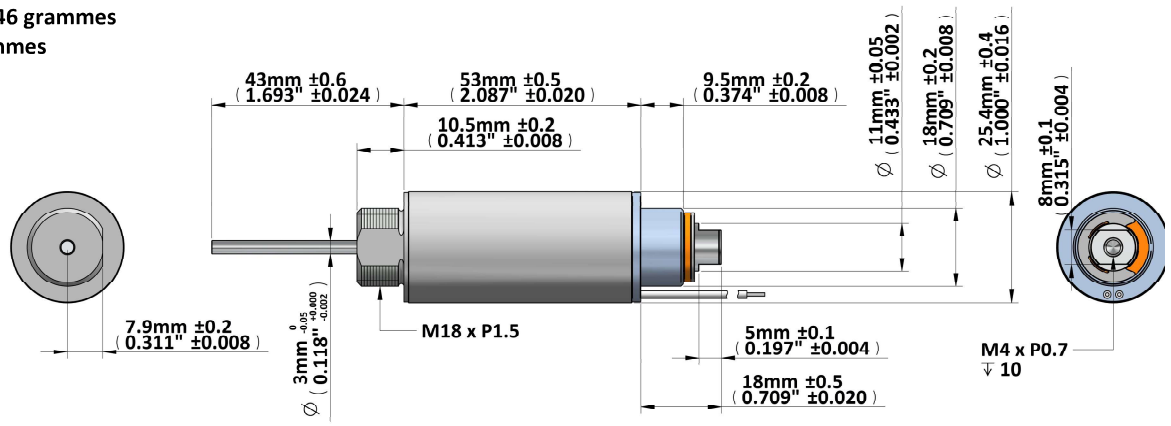

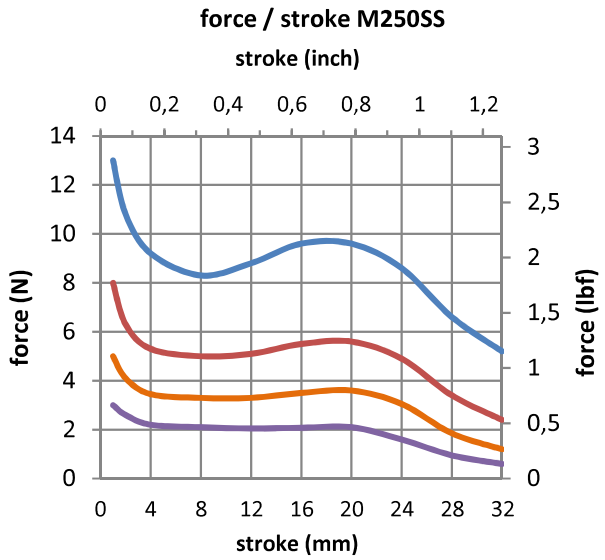

duty cycle = "on" time / "on" time + "off" time x 100%			100% cont.	50% or less	25% or less	10% or less
Max. "on" time in seconds			∞	290	26	6
watts at 20°C			8,5	17	34	85
ampere-turns at 20°			983	1390	1966	3109
AWG no.	resistance Ω±10% (at 20°C)	number of turns	volts DC			
M250SS-12v	17	1392	12,0	17,0	24,0	38,0
M250SS-24v	66	2686	24,0	34,0	48,0	76,0
M250SS-48v	260	5380	48,0	68,0	96,0	152,0
M250SS-96v	1170	11400	96,0	136,0	192	304

Insulation Resistance >100MΩ, 500VDC Megger
Dielectric Strength 1000VAC, 50/60Hz, 1 minute
Class E (120°C) insulation class

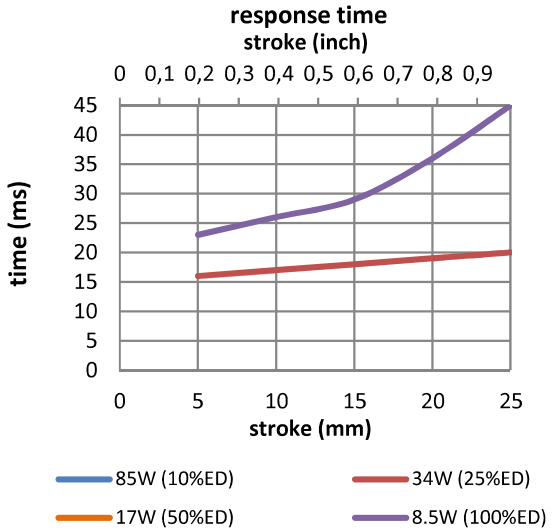

Geeplus reserves the right to change specifications without notice
www.geeplus.com