SVTM B Series

Synchronous Motors

TDS Precision Products

TDS Precision Products GmbH
Industriestrasse 1a
CH-8157 Dielsdorf

T + 41 44 885 30 80
info@tds-pp.com
www.tds-pp.com

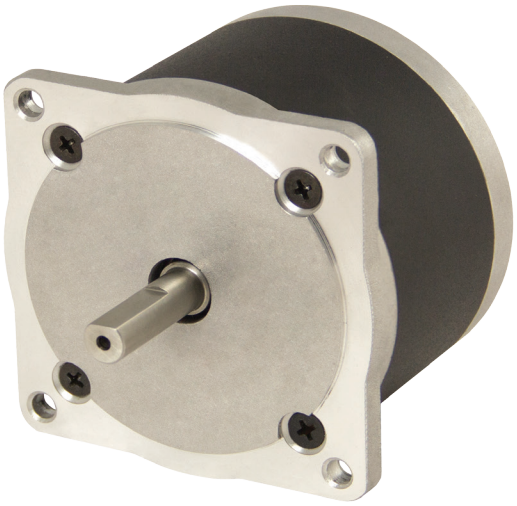

CUSTOMISABLE

COST-EFFECTIVE

HIGH POWER

Synchronous Motors are distinguished by ease of use; in fact, while being Brushless motors, therefore not subject to brush maintenance, they do not require drivers or controllers for operation.
Our motors are available for both the 220VAC voltage and 50Hz frequency markets, and the 110Vac voltage and 60Hz frequency markets.
Furthermore, the construction motor allows operating current to be equal to start current as well as having high dynamics in a start-stop operation.

Another distinctive feature of Synchronous motors is being able to obtain the stall torque of the locked rotor by applying a DC voltage; even in this condition, if the motor operates within its nominal parameters, there will be no overheating problems.
The motor is supplied with a free-wire solution but, as an option, you can have a terminal box in a hood mounted on the rear flange.

Benefits

- Compact
- Easy to use
- Customisable
- Cost-effective

Certifications

- CE
- RoHS 2011/65/EU

Product code

SVTM B ⬠ - □ - △ - ⬡ - ◇ - ☆☆☆

B Series

⬠ Frame
01 [82]

□ Synchronous torque

△ Operating voltage

⬡ Options
single [S]; double [D];
terminal box with PG13,5 [M];
terminal box with 3/8gas [I]

◇ Brake
no [0]

☆ Customizations

Features

Winding	three-phase synchronous motor
Operating temperature	-20° +40° C
Insulation class	B, 130°C
Magnets	Neodymium
Operation	bidirectional

Customizations

Wire drawing flange	Encoder
Wire drawing shaft	Wire length
Brake	Terminal box connection

SVTM B 01

Values	Unit	SVTM B		
		01-0.90-220-x-0-000	01-0.90-120-x-0-000	01-01.4-220-x-0-000
Frame	Ø mm	82	82	82
Length	mm	65	65	65
Synchronus max torque	Nm	0,9	0,9	1,4
Operating voltage	VAC	220	120	220
Operating frequency	Hz	50	60	50
Nominal speed	rpm	60	72	60
Rotor inertia	kg/cm²	0,65	0,65	0,65
Mass	kg	1,5	1,5	1,5
Ambient temperature (1)	°C	-20 +40	-20 +40	-20 +40
Insualtion class		B, 130°C	B, 130°C	B, 130°C
Suggested phase shift component				
Resistor	Ohm	750	470	400
	Watt	100	100	100
Capacitor	microF	0,8	2	2,5
	VAC	400	400	400

Values	Values	Values	Values	Values
		01-1.40-120-x-0-000	01-1.70-220-x-0-000	01-1.70-120-x-0-000
Frame	Ø mm	82	82	82
Length	mm	65	92	92
Synchronus max torque	Nm	1,4	1,7	1,7
Operating voltage	VAC	120	220	120
Operating frequency	Hz	60	50	60
Nominal speed	rpm	72	60	72
Rotor inertia	kg/cm²	0,65	1,2	1,2
Mass	kg	1,5	2,5	2,5
Ambient temperature (1)	°C	-20 +40	-20 +40	-20 +40
Insualtion class		B, 130°C	B, 130°C	B, 130°C
Suggested phase shift component				
Resistor	Ohm	200	820	300
	Watt	100	100	100
Capacitor	microF	6,3	1,6	4
	VAC	400	400	400

Values	Unit	SVTM B		
		01-2.60-120-x-0-000	01-3.20-220-x-0-000	01-3.20-120-x-0-000
Frame	Ø mm	82	82	82
Length	mm	129	129	129
Synchronus max torque	Nm	2,6	3,2	3,2
Operating voltage	VAC	120	220	120
Operating frequency	Hz	60	50	60
Nominal speed	rpm	72	60	72
Rotor inertia	kg/cm²	1,9	1,9	1,9
Mass	kg	3,7	3,7	3,7
Ambient temperature (1)	°C	-20 +40	-20 +40	-20 +40
Insualtion class		B, 130°C	B, 130°C	B, 130°C
Suggested phase shift component				
Resistor	Ohm	300	500	100
	Watt	100	100	100
Capacitor	microF	6,5	2,5	8
	VAC	400	400	400

(1) With no condansation

All dimensions in millimeters, unless otherwise specified

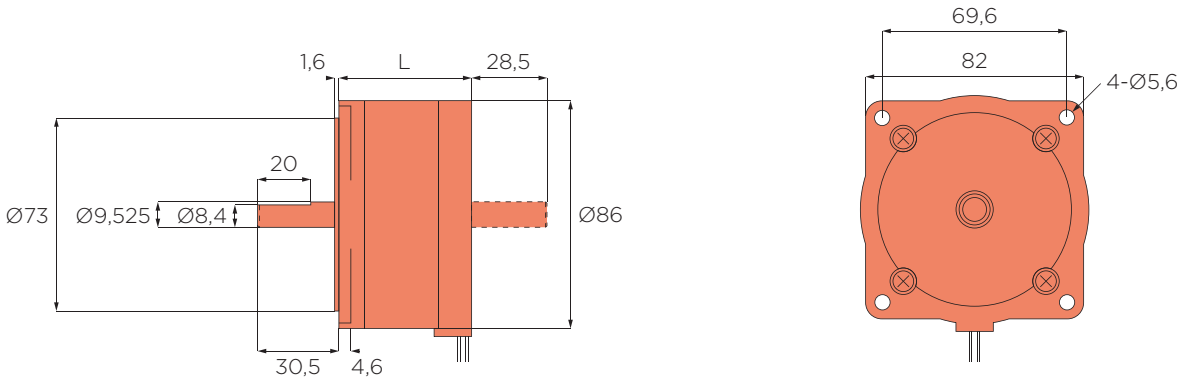

Notes

All dimensions in millimeters, unless otherwise specified

servotecnica

Hello,
how can I help you?

TDS Precision Products

TDS Precision Products GmbH
Industriestrasse 1a
CH-8157 Dielsdorf

T + 41 44 885 30 80
info@tds-pp.com
www.tds-pp.com